Journal of Electrical and Computer Engineering Innovations
(JECEI)
Journal homepage: http://www.jecei.sru.ac.ir

Research paper

Nonlinear Analysis of Colpitts Oscillator using Differential Transform Method

A. Ghomi Taheri[1], F. Setoudeh[2,*], M.B. Tavakoli[1]

[1]*Department of Electrical Engineering, Arak Branch, Islamic Azad University, Arak, Iran.*

[2]*Department of Electrical Engineering, Arak University of Technology, Arak, Iran.*

Article Info

Article History:

Received: 22 June 2020
Reviewed: 28 August 2020
Revised: 27 October 2020
Accepted: 26 December 2020

Keywords:

Differential transform method
Nonlinear analysis
Runge-Kutta
Lyapunov exponent
Analytically
Wolf method

*Corresponding author's Email Address:
f.setoudeh@arakut.ac.ir

Abstract

Background and Objectives: The Differential transform method (DTM) is used in the analysis of ordinary, partial, and high-order differential equations. Recently, the DTM is used in the nonlinear analysis of physical nonlinear dynamic systems.

Methods: The DTM method is used to analyze and analytically solve the nonlinear mathematical model of bias current-controlled Colpitts oscillator with variable coefficients. Intervals of the validity of the proposed method are evaluated by using the fourth order Runge-Kutta method (RK4M). In this note, the Lyapunov exponent (LE) can be used to analyze the Colpitts oscillator. By using DTM, the LEs are calculated analytically with unknown parameters in a short interval of time $t\epsilon$[0, 3 Sec].

Results: In this paper, intervals of the validity of the proposed method are evaluated using RK4M. In addition, LEs are calculated using analytical and numerical methods based on DTM technique and Wolf method, respectively. LEs of the proposed system are presented as a function of the control parameter to confirm the applied technique's usefulness.

Conclusion: By comparing these two methods, the proposed DTM analytical technique is relatively more precise. Simulation results confirmed the impact of different parameters on LEs with two different initial conditions. The results show good accuracy of the DTM in short time intervals $t\epsilon$[0, 3 Sec].

©2021 JECEI. All rights reserved.

Introduction

Today, the study of nonlinear systems is an important topic for scientific research. Among the important topics discussed in nonlinear systems, we can mention behavioral analysis and control. Nonlinear systems show different behaviors such as stability, periodic, quasi-periodic, and chaotic [1], [2]. Among the differences between linear and nonlinear systems, we can mention their different behaviors. In linear systems, equilibrium point stability can be used to evaluate the stability of a dynamic system for all initial conditions.

In case of instability, the system response will be unstable for all initial conditions. However, in nonlinear systems, if the system equilibrium point is stable, for some initial conditions, the system response will be convergent (stable), and for others, the system response will be divergent (unstable), which is difficult to detect [3], [4]. Lyapunov exponent (LE) is one of the methods of behavioral analysis for nonlinear system [5]-[7]. Many methods are used to calculate the LE based on a mathematical model [8]-[11]. One of the important features of dynamic systems are their sensitivity to the initial conditions [12], [13]. Therefore, determining the

degree of this sensitivity is not an easy task. LE is one of the tools used for this purpose [14], [15]. There are various methods, such as Jacobian-based and direct methods for calculating LE [16], [17]. Several algorithms have been proposed to calculate LE using time series based on the direct method [17]-[20]. The Wolff algorithm searches for time series for close points in space. In this method, the proximity points in one direction is used to calculate LE [20], [21]. In [22] genetic algorithm is used to calculate the LE. In [23], a new method is applied for LE calculation based on QR decomposition [23]. Liao used a novel technique for sensitivity analysis of the derivatives of the Largest Lyapunov exponent (LLE) using least mean squares error based on known parameters [24].

Many engineering issues, including electrical engineering, are inherently nonlinear. All of these problems are described by ordinary and partial differential equations. Recently, different analytical methods are applied to solve nonlinear differential equations such as differential transform method (DTM), multi-stage differential transform method (MsDTM), Elzaki transform method (ETM), Adomian decomposition method (ADM) and other methods [25]-[32].

Various analytical methods have been proposed for solving nonlinear systems, but we are looking for simple, fast, and low-error methods. In [33], [34], the DTM is used to solve ordinary, partial and high-order differential equations. In this method, to solve linear and nonlinear differential equations, a time series based on the Taylor series is estimated [35]. The main advantages of this method are no linearization and discretization. This method, like other methods, has disadvantages, one of which is to obtain an incomplete series from the system. This system does not show the actual behavior of the system, but in most cases, offers a very good approximation of the correct solution in short time intervals. In fact, this method cannot provide a good answer in big times. Recently, the DTM has been used to solve physical nonlinear dynamic systems. In [36], the DTM is used to analytical solution of the cantilever beam system. In [37], to solve the Lane-Emden type equations analytically in different physical models, the improved DTM is used.

In [38], [39], the Duffing oscillator is solved using analytical and numerical methods based on DTM technique and Fourth order Runge-Kutta method (RK4M), respectively [38], [39]. In [40], the DTM is used to approximate an analytical solution for a dynamic model of the epidemiology of Corona-virus [40]. In this paper, the Colpitts oscillator is considered an example of a sine oscillator. To make a general conclusion about the design of this type of oscillators, there are many reasons to study and analyze this circuit, such as:

1- Colpitts oscillator is widely used in telecommunication systems.
2- The operating frequency of these oscillators, depending on the technology, which can vary from a few Hz to the microwave range (Gigahertz).
3- Since the transistor is a nonlinear device, therefore this oscillator has an intrinsic nonlinearity property.
4- Colpitts oscillator has nonsymmetrical and generic properties.
5- This oscillator have rich, dynamic behavior such as periodic and bursting oscillations [41].

In this paper, a new method for nonlinear analysis of colpitts oscillator is presented analytically using DTM technique. Another point that can be considered as an innovation of this research is the calculation of LE analytically using DTM.

Review of Differential Transform Method (DTM)

If $x(t)$ is an analytic continuous and derivative function, therefore, using the differential transform of $x(t)$ is shown as follow:

$$X(k)=\frac{1}{k!}\left[\frac{d^k x(t)}{dt^k}\right]_{t=t_0} \tag{1}$$

where $k=0,1,2,\ldots,n$, and $X(k)$ indicates the differential transform of $x(t)$ at $t=t_0$ in the k domain. So,

$$x(t)=\sum_{k=0}^{\infty} X(k)(t-t_0)^k \tag{2}$$

Using (1) and (2), some differential transform properties are shown in the table [36].

Table 1: Some of the essential mathematical properties

Original function	Differential Transformed
$x(t)=Ax_1(t)$	$X(k)=AX_1(k)$
$\dot{x}(t)=\frac{dx}{dt}$	$(k+1)X(k+1)$
$f(x(t))=x_1(t)\pm x_2(t)$	$F(k)=X_1(k)\pm X_2(k)$
$f(x(t))=\frac{d^n x(t)}{dt^n}$	$F(k)=\frac{(k+n)!}{k!}X(k+n)$
$f(x(t))=x_1(x(t))\,x_2(x(t))$	$F(k)=\sum_{k_1=0}^{k} X_1(k_1)X_2(k-k_1)$
$x(t)=t^n$	$X(k)=\delta(k-n)$
$x(t)=e^{\lambda t}$	$X(k)=\frac{\lambda^k}{k!}$
$x(t)=\sin(\omega t+\alpha)$	$X(k)=\frac{\omega^k}{k!}\sin\left(\frac{k\pi}{2}+\alpha\right)$
$x(t)=\cos(\omega t+\alpha)$	$X(k)=\frac{\omega^k}{k!}\cos\left(\frac{k\pi}{2}+\alpha\right)$

*where λ, ω, and α are constant values.

Using the DTM algorithm, the *nth* degree Taylor polynomial of $x(t)$ is:

$$x(t) = X(0) + X(1).t + X(2).t^2 + \cdots + X(n).t^n \quad (3)$$

Bias Current Controlled Colpitts Oscillator

Figure 1(a) indicates a Bipolar Junction Transistor (BJT) based on the bias of current-controlled Colpitts oscillator [42]. Due to analyze the nonlinearities associated with a BJT based Colpitts oscillator the small-signal equivalent circuit model of a BJT is used. Figure 1(b) shows the small-signal equivalent circuit of the proposed Colpitts oscillator [42]. In Fig. 1 (a), Q_1 and Q_2 act as current mirror source that biases Q. The Colpitts oscillator consists of a gain device and the tank circuit including a combination of inductors and capacitors.

The output of Colpitts oscillator is connected with an LC circuit feedback loop. A gain device is needed to compensate for the lost energy in the tank circuit and to maintain oscillation inside the tank circuit. One of the advantages of the Colpitts oscillator over other oscillators is that the Colpitts oscillator can be used to produce low-harmonic sine waveforms due to the low impedance paths of the capacitors at high frequencies. Also because of these capacitive reaction characteristics, the MOSFET-based Colpitts oscillator can operate at high frequencies (see Appendix).

The fundamental frequency of oscillation is given by:

$$f = \frac{1}{2\pi\sqrt{L\dfrac{C_1C_2}{C_1+C_2}}} \quad (4)$$

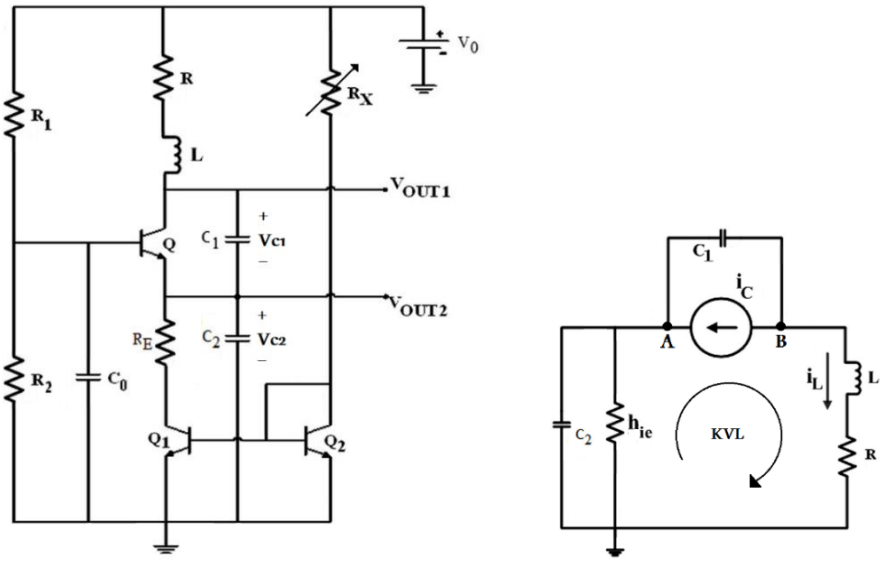

(a) (b)

Fig. 1: (a) The schematic of Colpitts oscillator. (b) Small-signal equivalent circuit of the Colpitts oscillator.

The dynamic state equations are calculated as:

$$\begin{cases} KCL\ A \rightarrow C_1\dfrac{dv_{c_1}(t)}{dt} + i_L(t) + i_{C(t)} = 0 \\ KCL\ B \rightarrow C_2\dfrac{dv_{c_2}(t)}{dt} + \dfrac{v_{c_2}(t)}{h_{ie}} + i_L(t) = 0 \\ KVL \rightarrow L\dfrac{di_L(t)}{dt} + Ri_L(t) - v_{c_1}(t) - v_{c_2}(t) = 0 \end{cases} \quad (5)$$

where $v_{c_1}(t)$ and $v_{c_2}(t)$ are the voltages across C_1 and C_2, respectively, and $i_L(t)$ is the current through inductor L.

Here,

$$i_C = f(v_{be}) \quad (6)$$

where [42],

$$f(v_{be}) = g_{m1}v_{be} - g_{m3}v_{be}^3 \quad (7)$$

Such that,

$$f(-v_{c2}(t)) = -g_{m1}v_{c2}(t) + g_{m3}v_{c2}^3(t) \quad (8)$$

From (5) and (8), the following stands:

$$\begin{cases} \dfrac{dv_{c1}(t)}{dt} = -\dfrac{1}{C_1}\left(i_{L(t)} - g_{m_1}v_{c2}(t) + g_{m_3}v_{c2}^3(t)\right) \\ \dfrac{dv_{c2}(t)}{dt} = -\dfrac{1}{C_2}\left(i_{L(t)} + \dfrac{v_{c2}(t)}{h_{ie}}\right) \\ \dfrac{di_{L(t)}}{dt} = \dfrac{1}{L}\left((v_{c1}(t)+v_{c2}(t)) - R\,i_{L(t)}\right) \end{cases} \quad (9)$$

where g_{m_1} and g_{m_3} represent the linear and the nonlinear small signal transconductance of the proposed oscillator [42].

Let

$$x(t) = \left(v_{c1}(t)/v_T\right), y(t) = \left(v_{c2}(t)/v_T\right), z(t) = \left(i_L(t)/I_0\right),$$

$\omega_0^{-1} = \sqrt{L\,C_1 C_2 / (C_1 + C_2)}$, $h_r = L / \left(R\,(C_1 + C_2)\,h_{ie}\right)$, $\tau = \omega_0 t$, $g = LI_0 / \left(R(C_1 + C_2)v_T\right)$, $k_c = \left(C_2 / (C_1 + C_2)\right)$, $Q = \left(\omega_0 L / R\right)$.

So, the normalized state dynamic equations are calculated as:

$$\begin{cases} \dfrac{dx(t)}{d\tau} = -\dfrac{g(z(t) - ay(t) + by(t)^3)}{Q(1-k_c)} \\ \dfrac{dy(t)}{d\tau} = -\dfrac{(gz(t) + h_r y(t))}{Qk_c} \\ \dfrac{dz(t)}{d\tau} = \dfrac{Qk_c(1-k_c)\,(x(t) + y(t))}{g} - \dfrac{z(t)}{Q} \end{cases} \quad (10)$$

where a and b indicate the normalized linear and nonlinear small signal transconductance. The parameters of the proposed oscillator can be found in Table 2 [42].

Table 2: Circuit parameters

Parameter	Value
g	1.32
Q	4
a	2.36
b	0.2
h_r	0.04
g_{m10}	0.04
I_0	1 mA
v_T	25 mV

In order to analyze the behavior of nonlinear systems, we can mention methods such as sensitivity to initial conditions, stability analysis of equilibrium point, power spectrum, LE, Lyapunov dimension and dissipation. A sign of chaotic dynamics is its sensitive dependence on initial conditions, as indicated by the presence of positive LE.

LEs are used to describe the nonlinear behavior of the proposed oscillator [14], [15]. LE is a quantitative measure that indicates chaotic behavior. When at least one of LEs is zero, then the trajectory does not converge to a fixed point, in other words, the system oscillates. If LLE is zero, then the system oscillates around the equilibrium point. If LLE is positive, then the system is chaotic.

The LEs of the bias current-controlled Colpitts oscillator are shown in Fig. 2 for different initial conditions.

Since there is one positive LEs, then system (9) is a chaotic system [15], [43].

A. Fourth-Order Runge-Kutta Solution

The vector form of the proposed system (9) can be considered,

$$\frac{dW}{dt} = F\left(t, x(t), y(t), z(t)\right), \qquad t \in \left[t_0, t_1\right] \quad (11)$$

with a given step length h through the interval $\left[t_0, t_1\right]$, successively producing approximations W_i to W_{i+1}.

Where,

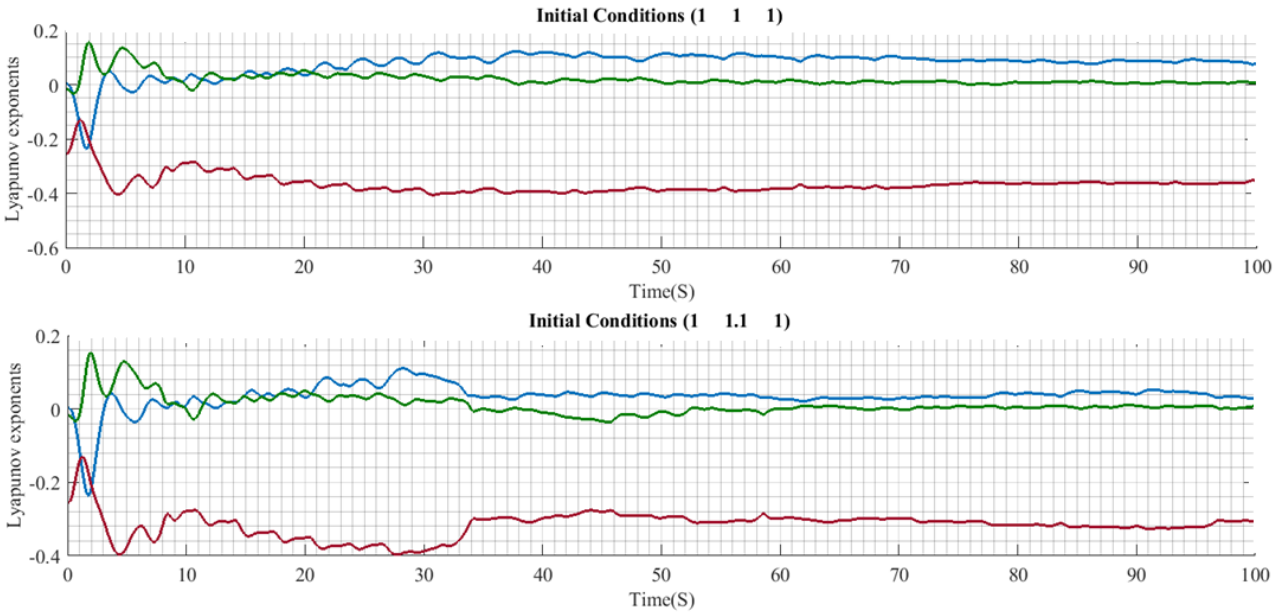

Fig. 2: LEs as a function of time for different initial conditions.

$$W=\begin{bmatrix} x(t) \\ y(t) \\ z(t) \end{bmatrix},$$

$$F\left(t,x(t),y(t),z(t)\right)=\begin{bmatrix} -\dfrac{g(z(t)-ay(t)+by(t)^3)}{Q(1-k_c)} \\ -\dfrac{(gz(t)+h_r y(t))}{Qk_c} \\ \dfrac{Qk_c(1-k_c)(x(t)+y(t))}{g}-\dfrac{z(t)}{Q} \end{bmatrix} \quad (12)$$

The RK4 method is the most popular method for solving state equations of nonlinear dynamic systems by using numerical approximations.

By applying the RK4 method for the proposed system (9), so,

$$W_{i+1}=W_i+\frac{h}{6}(K_1+2K_2+2K_3+K_4), \qquad (i=1,2,\ldots,n) \quad (13)$$

where $h=\dfrac{t_1-t_0}{n}$ represents the step length through the interval $[t_0, t_1]$, $K_1=\begin{bmatrix} k_{1x} \\ k_{1y} \\ k_{1z} \end{bmatrix}, K_2=\begin{bmatrix} k_{2x} \\ k_{2y} \\ k_{2z} \end{bmatrix}$, and $K_3=\begin{bmatrix} k_{3x} \\ k_{3y} \\ k_{3z} \end{bmatrix}$ represent slop at four places within each step.

The slop at four places within each step are calculated as follow:

$$\begin{aligned} K_1&=F\left(t_i,x_i(t),y_i(t),z_i(t)\right) \\ K_2&=F\left(t_i+\frac{h}{2},x_i(t)+\frac{h}{2}k_{1x},y_i(t)+\frac{h}{2}k_{1y},z_i(t)+\frac{h}{2}k_{1z}\right) \\ K_3&=F\left(t_i+\frac{h}{2},x_i(t)+\frac{h}{2}k_{2x},y_i(t)+\frac{h}{2}k_{2y},z_i(t)+\frac{h}{2}k_{2z}\right) \\ K_4&=F\left(t_i+h,x_i(t)+hk_{3x},y_i(t)+hk_{3y},z_i(t)+hk_{3z}\right) \end{aligned} \quad (14)$$

where $t_i=t_0+ih$ and $i=1,2,\ldots,n$. By using numerical values for parameters of the proposed system (9), as shown in Table 2, the waveform time domain of state variables are calculated by applying the RK4 method with different initial conditions. Figure 3 illustrates the waveform time domain of the state variables with different initial conditions. As shown in Fig. 3, small alterations in initial conditions affect the response of the proposed system (Fig. 3). Therefore, system (9) is sensitive to initial conditions (Fig. 3). Figure 4 depicts typical stable periodic orbits with the different initial conditions.

Power spectrum can be applied to evaluate the behavioral analysis of proposed oscillator such as harmonic, bifurcation, chaos, etc. Harmonic distortion is evaluated by the power spectrum of the voltage or current signal. Existence of an exponential decay followed by a much slower decay (like an algebraic decay) in the power spectrum of time series can be a necessary condition for existence of chaotic signals [44]. The power spectrum of the state variables in the proposed Colpitts oscillator is shown in Fig. 5.

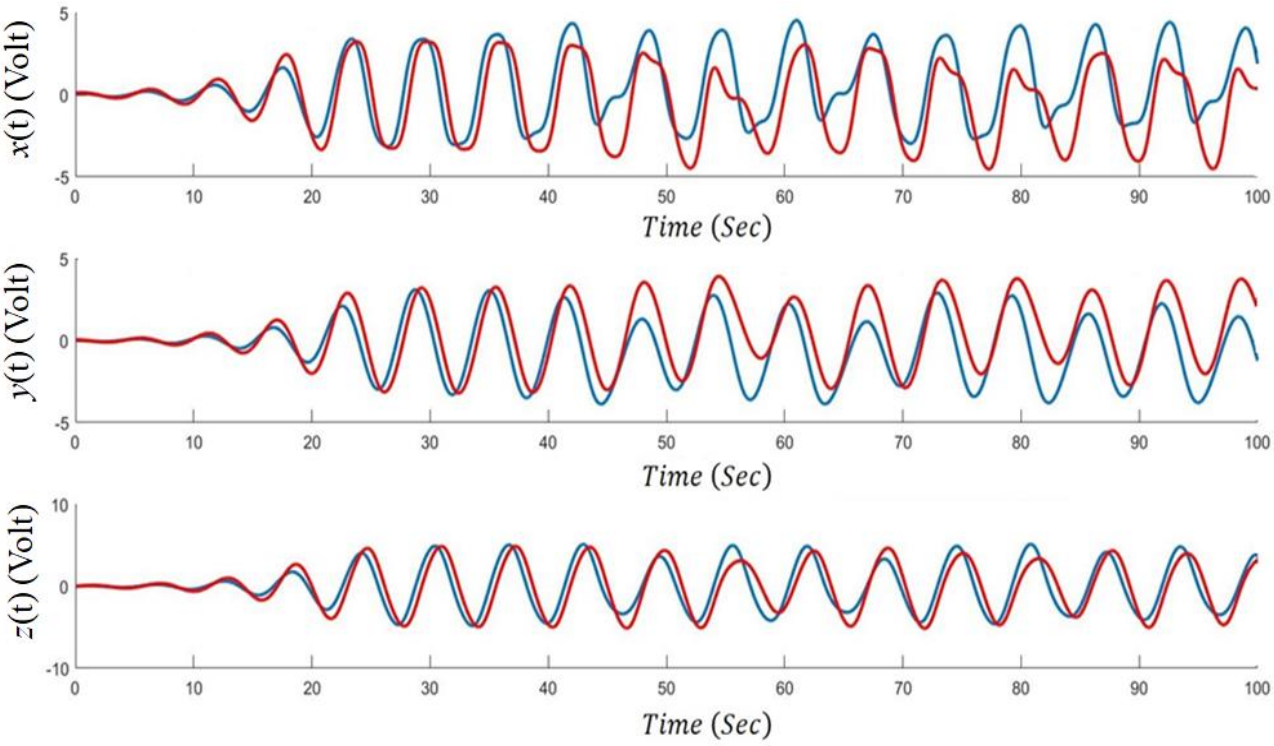

Fig. 3: Transient chaotic time-series with different initial conditions.

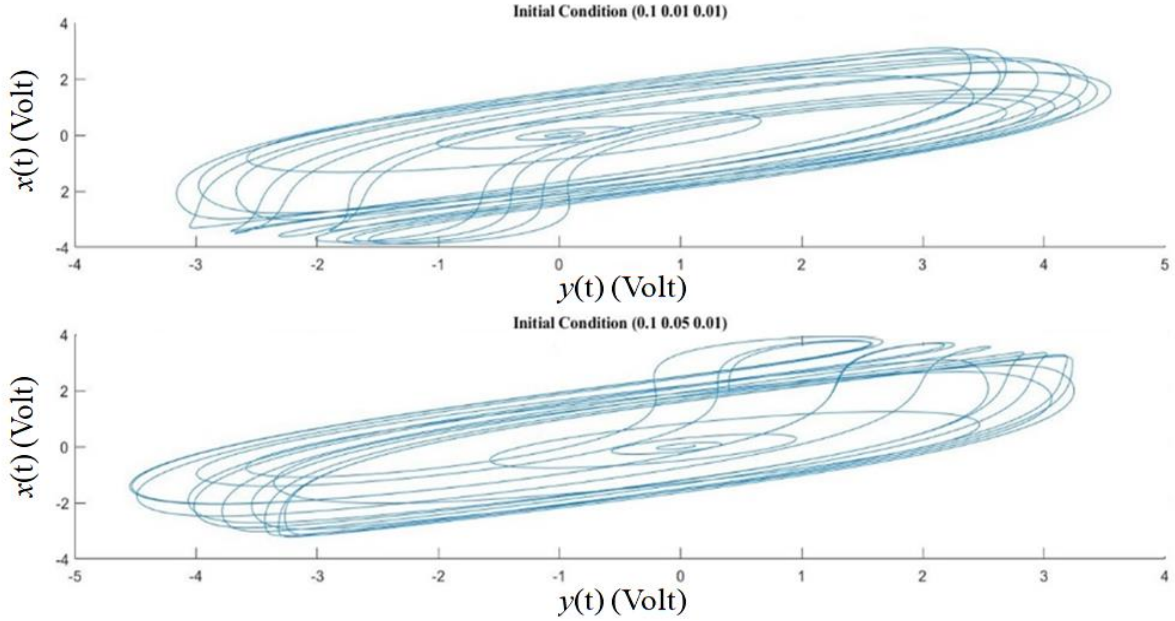

Fig. 4: Transient attractor with different initial conditions.

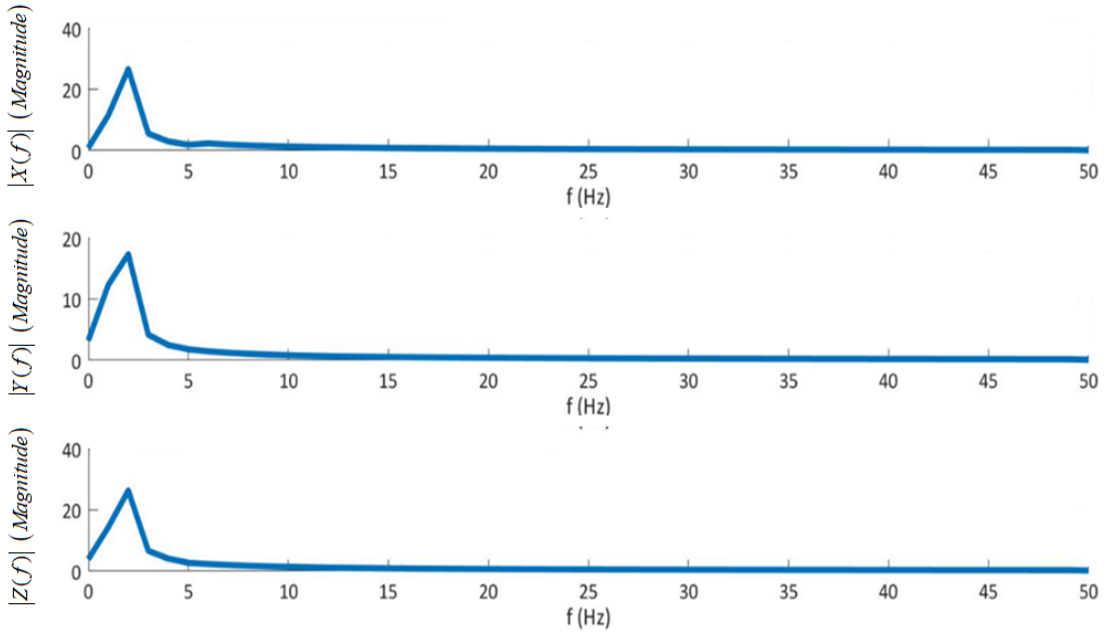

Fig. 5: Power spectrum of state variables in the proposed oscillator.

As shown in Fig. 5 existence of exponential decay demonstrate chaos in the proposed oscillator. Chaotic systems are a class of dynamic systems that have apparently random states of disorder and irregularities that have basic patterns and definite rules. These systems are very sensitive to the initial conditions that each point in a chaotic system is arbitrarily close to other points that have significantly different paths or paths in the future.

As it is expected from the definition of chaos and its variation in the different initial conditions, the spectrum of the chaos signal is broadband. It is also not worthwhile that the spectrum has strong frequency components at the period tripled frequency values. Figure 6 illustrates the bifurcation diagram based on a variation of $x(t)$ and $y(t)$ with respect to parameter $g \in [0.001\ 1.6]$. Viewing the bifurcation diagram, chaotic areas can be detected.

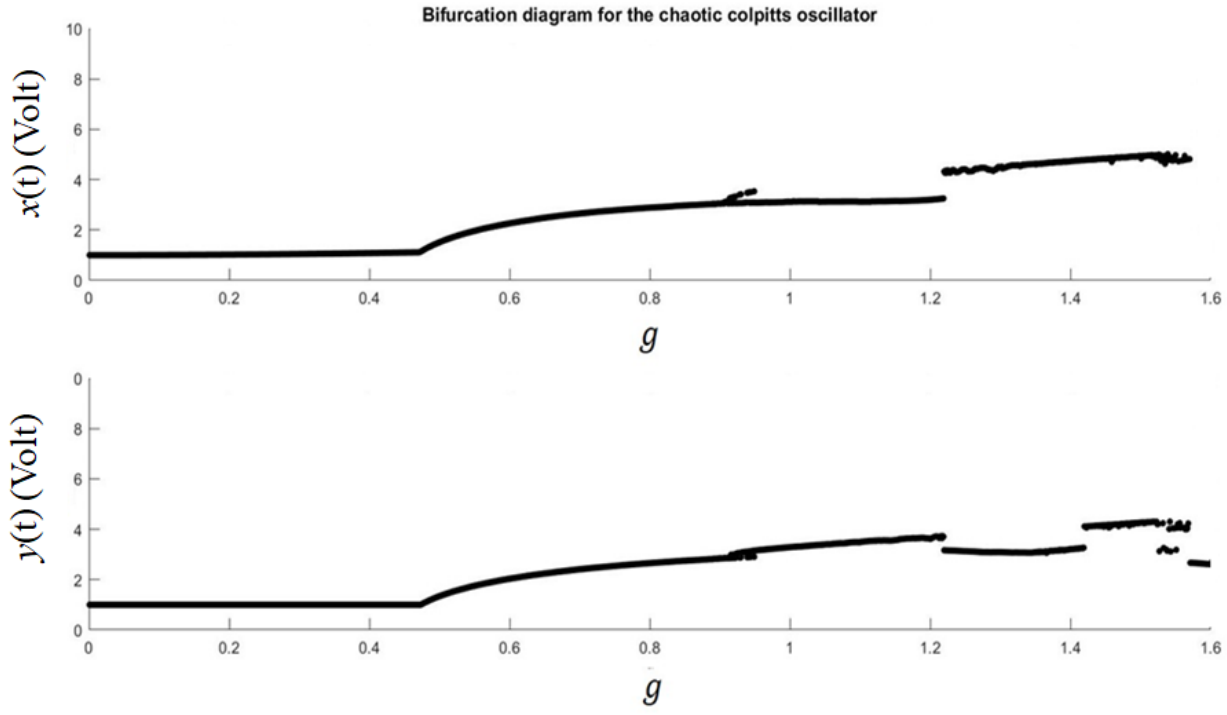

Fig. 6: The bifurcation diagram showing variation of $x(t)$ and $y(t)$ with respect to parameter g.

B. Analytical Analysis of Colpitts Oscillator Based on DTM Technique

The differential transform of $v_{c1}(t)$, $v_{c2}(t)$ and $i_L(t)$ is considered as $V_{c1}(k)$, $V_{c2}(k)$ and $I_L(k)$. By using the DTM, system (9) is converted as follow:

$$\begin{cases} (k+1)V_{c1}(k+1) = -\dfrac{I_L(k)}{C_1} + \dfrac{\alpha V_{c2}(k)}{C_1} - \dfrac{\beta}{C_1}\displaystyle\sum_{k_2=0}^{k}\sum_{k_1=0}^{k_2} V_{c2}(k_1)V_{c2}(k_2-k_1)V_{c2}(k-k_2) \\ (k+1)V_{c2}(k+1) = -\dfrac{I_L(k)}{C_2} - \dfrac{V_{c2}(k)}{h_{ie}C_2} \\ (k+1)\,\mathrm{I}_L(k+1) = \dfrac{V_{c1}(k)+V_{c2}(k)}{L} - \dfrac{RI_L(k)}{L} \end{cases} \quad (15)$$

where $k = 0,1,\ldots,n$. The solution of the system (9) is calculated by:

$$\begin{cases} v_{c_1}(t) = V_{c_1}(0) + V_{c_1}(1)\cdot t + V_{c_1}(2)\cdot t^2 + \ldots + V_{c_1}(n)\cdot t^n \\ v_{c_2}(t) = V_{c_2}(0) + V_{c_2}(1)\cdot t + V_{c_2}(2)\cdot t^2 + \ldots + V_{c_2}(n)\cdot t^n \\ i_L(t) = I_L(0) + I_L(1)\cdot t + I_L(2)\cdot t^2 + \ldots + I_L(n)\cdot t^n \end{cases} \quad (16)$$

where,

$$\begin{cases} V_{c1}(0)=1 \\ V_{c1}(1)=-\dfrac{(1-\alpha+4\beta)}{C_1} \\ V_{c1}(2)=-\dfrac{1}{2C_1}\left(\left(\dfrac{2-R}{L}\right)+\left((\alpha-4\beta)\left(\dfrac{h_{ie}+1}{h_{ie}C_2}\right)\right)\right) \\ V_{c1}(3)=-\dfrac{1}{3C_1}\left(\left(\dfrac{(\alpha-1-4\beta)}{2LC_1}-\dfrac{h_{ie}+1}{2Lh_{ie}C_2}-\dfrac{2R-R^2}{2L^2}\right)+\left((4\beta-\alpha)\left(\dfrac{R-2}{2LC_2}+\dfrac{h_{ie}+1}{2h_{ie}{}^2C_2{}^2}\right)\right)\right) \end{cases} \tag{17}$$

and,

$$\begin{cases} V_{c2}(0)=1 \\ V_{c2}(1)=-\dfrac{1}{C_2}\left(1+\dfrac{1}{h_{ie}}\right) \\ V_{c2}(2)=\left(\dfrac{R-2}{2LC_2}+\dfrac{h_{ie}+1}{2h_{ie}{}^2C_2{}^2}\right) \\ V_{c2}(3)=-\dfrac{1}{3C_2}\left(\dfrac{(\alpha-1-4\beta)}{2LC_1}-\dfrac{h_{ie}+1}{2Lh_{ie}C_2}-\dfrac{2R-R^2}{2L^2}\right)-\dfrac{1}{3h_{ie}C_2}\left(\dfrac{R-2}{2LC_2}+\dfrac{h_{ie}+1}{2h_{ie}{}^2C_2{}^2}\right) \end{cases} \tag{18}$$

Now, by using DTM technique, (10) is converted as follow:

$$\begin{cases} (k+1)\,X\,(k+1)=-\dfrac{g\left(Z(k)-aY(k)+b\sum_{k_2=0}^{k}\sum_{k_1=0}^{k_2}Y(k_1)Y(k_2-k_1)Y(k-k_2)\right)}{Q(1-k_c)} \\ (k+1)\,Y\,(k+1)=-\dfrac{\left(gZ\,(k)+h_rY\,(k)\right)}{Qk_c} \\ (k+1)\,Z\,(k+1)=\dfrac{Qk_c\left(1-k_c\right)\left(X\,(k)+Y\,(k)\right)}{g}-\dfrac{Z(k)}{Q} \end{cases} \tag{19}$$

Calculating the DTM of $x(t), y(t)$, and $z(t)$ with order k, denoted by $X(k), Y(k)$, and $Z(k)$ yielded the following components for initial conditions $x\,0\,, y\,0\,, z\,0\ = 0.1, 0.01, 0.01$ as shown in Table 3:

Table 3: Numerical values for $X(k), Y(k)$, and $Z(k)$

k	X(k)	Y(k)	Z(k)
0	0.1	0.01	0.01
1	0.008975868	-0.0068	0.0808333333333333
2	-0.03197070536	-0.026607	-0.0092799742424242
3	-0.0117724698910667	0.0022189743333333	-0.0140190186515152
4	0.00317683685466210	0.00230204320583333	-0.000933185492941919
5	0.000839855411252330	0.000113972312245	0.000876792617146404
6	$-6.64511834461511\times10^{-5}$	$-9.68270955935878\times10^{-5}$	$8.38997676564415\times10^{-5}$
7	$-2.90842752140743\times10^{-5}$	$-7.63390067733995\times10^{-6}$	$-2.06672296933295\times10^{-5}$
8	$9.84609104495675\times10^{-6}$	$1.72413120139303\times10^{-6}$	$-2.83124906180071\times10^{-6}$
9	$4.36636974794568\times10^{-7}$	$2.03793528528957\times10^{-7}$	$2.32062651703437\times10^{-7}$
10	$2.66264015557214\times10^{-8}$	$-1.57237220694848\times10^{-8}$	$4.27158960804087\times10^{-8}$

Therefore, the exact solution of the proposed system (10) by using the DTM approximated solution is applied by:

$$x(t) = 0.1 + 0.008975868t - 0.03197070536t^2 - 0.0117724698910667t^3 + 0.0031768368546621t^4 + 0.000839855411252330t^5 - 6.64511834461511\times10^{-5}t^6 - 2.90842752140743\times10^{-5}t^7 + 9.84609104495675\times10^{-8}t^8 + 4.36636974794568\times10^{-7}t^9 + 2.66264015557214\times10^{-8}t^{10} + \cdots \quad (20)$$

$$y(t) = 0.01 + -0.0068t - 0.026607t^2 + 0.00221897433333333t^3 + 0.00230204320583333t^4 + 0.000113972312245000t^5 - 9.68270955935878\times10^{-5}t^6 - 7.63390067733995\times10^{-6}t^7 + 1.72413120139303\times10^{-6}t^8 + 2.03793528528957\times10^{-7}t^9 - 1.57237220694848\times10^{-8}t^{10} + \cdots \quad (21)$$

$$z(t) = 0.01 + 0.0808333333333333t - 0.00927997424242424t^2 - 0.0140190186515152t^3 - 0.000933185492941919t^4 + 0.000876792617146404t^5 + 8.38997676564415\times10^{-5}t^6 - 2.06672296933295\times10^{-5}t^7 - 2.83124906180071\times10^{-6}t^8 + 2.32062651703437\times10^{-7}t^9 + 4.27158960804084\times10^{-8}t^{10} + \cdots \quad (22)$$

The solution points of the proposed system in (10) at different time steps by using the RK4M and DTM are calculated in Table 4.

Table 4: Numerical comparison for determination of $x(t)$, $y(t)$, and $z(t)$ for different values of *t*

t	DTM			RK4M		
	$x(t)$	$y(t)$	$z(t)$	$x(t)$	$y(t)$	$z(t)$
0	0.1	0.01	0.01	0.1	0.01	0.01
0.5	0.095247232451	0.00037149561	0.04631451035	0.095247232450	0.0003714956808	0.046314510352
1	0.069154411280	-0.0188745589	0.06753862363	0.069154413293	-0.0188745614562	0.067538623383
1.5	0.023025009693	-0.0412393787	0.06553113684	0.023025102617	-0.0412395952566	0.065531108763
2	-0.034105715142	-0.0584408546	0.03768295347	-0.034105716380	-0.058445932568	0.037681982560
2.5	-0.087115020734	-0.0626091225	-0.01095040956	-0.087141309621	-0.0626673343872	-0.010966716952
3	-0.118494413767	-0.0486773921	-0.06758279642	-0.118872016717	-0.0491002086887	-0.067749376285
3.5	-0.112443409464	-0.0158464329	-0.11378076454	-0.11535598343	-0.018080895574	-0.114961971915
4	-0.05565022038	0.03338384908	-0.12830578074	-0.071274445331	0.024050338342	-0.134651736944
4.5	0.07171947931	0.09840097092	-0.087005638598	0.0082688441589	0.066622101201	-0.113629326843

As shown in Table 4, the solutions of system (10) with DTM technique have a good accuracy. The solutions of the RK4M and DTM are shown in Fig. 7.

Lyapunov Exponent Calculation Based on Analytical DTM Technique

Let us define $x(1), x(2), \ldots, x(N)$ as the elements of a time series. LE can be defined as [17], [19]:

$$\lambda = \frac{1}{T}\ln\frac{|x(i+T) - x(j+T)|}{|x(i) - x(j)|} \quad (23)$$

where T indicates the number of iterations or evolution times. $x(N)$ represents the time series value at the *Nth* time.

From (2), so,

$$x(N) = \sum_{k=0}^{n} X(k) N^k \quad (24)$$

So, the LEs can be approximated analytically based on unknown parameters. In this case, according to the DTM technique and (24),

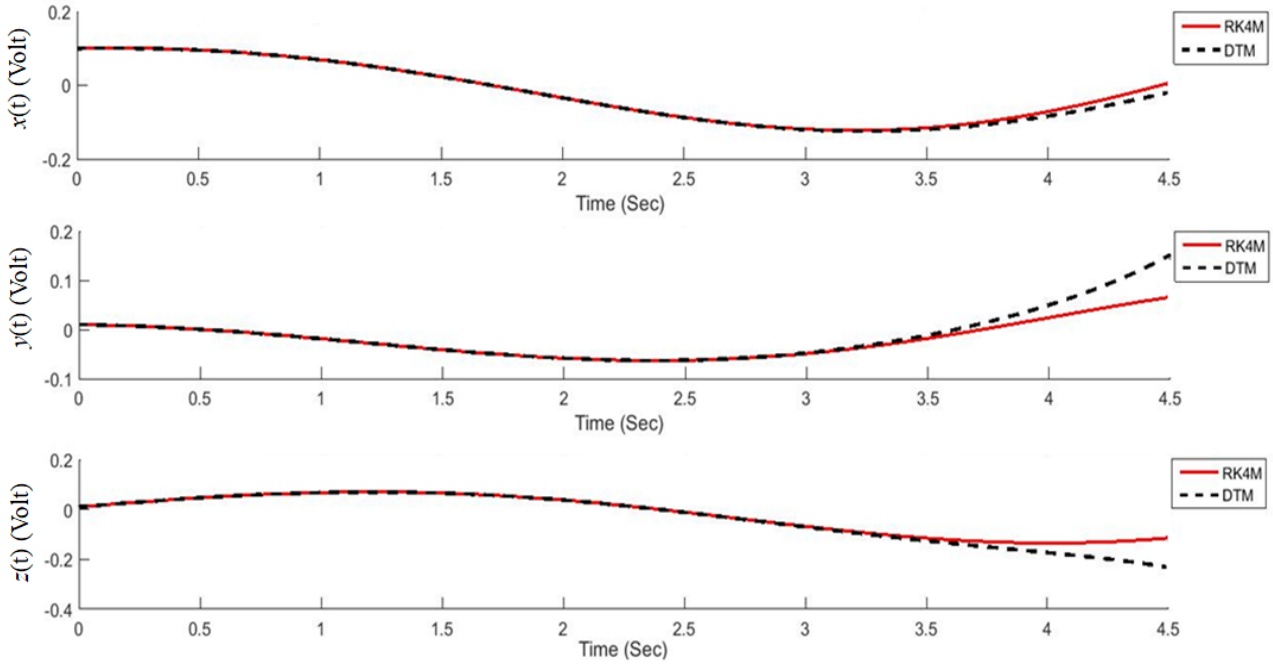

Fig. 7: Numerical comparison for time series of $x(t)$, $y(t)$ and $z(t)$ between RK4M and DTM.

$$\lambda = \frac{1}{T}\ln\frac{\left|\sum_{k=1}^{n} X(k)(i+T)^k - \sum_{k=1}^{n} X(k)(j+T)^k\right|}{\left|\sum_{k=1}^{n} X(k) i^k - \sum_{k=1}^{n} X(k) j^k\right|} \quad (25)$$

Note that,

$$\lambda = \frac{1}{T}\ln\frac{\left|X(1)(i-j)+\sum_{k=2}^{n} X(k)\left[(i+T)^k-(j+T)^k\right]\right|}{\left|X(1)(i-j)+\sum_{k=2}^{n} X(k)\left[i^k-j^k\right]\right|} \quad (26)$$

where λ is LE, $X(k)$ represents of the differential transform of $x(t)$, and n is decided by the convergence of natural frequency.

In the proposed current-controlled Colpitts oscillator described by (9), and according to (25), LEs of the proposed oscillator are calculated analytically in the following form:

$$\lambda_1 = \frac{1}{T}\ln\frac{\left|V_{c1}(1)(i-j)+\sum_{k=2}^{n} V_{c1}(k)\left[(i+T)^k-(j+T)^k\right]\right|}{\left|V_{c1}(1)(i-j)+\sum_{k=2}^{n} V_{c1}(k)\left[i^k-j^k\right]\right|} \quad (27)$$

$$\lambda_2 = \frac{1}{T}\ln\frac{\left|V_{c2}(1)(i-j)+\sum_{k=2}^{n} V_{c2}(k)\left[(i+T)^k-(j+T)^k\right]\right|}{\left|V_{c2}(1)(i-j)+\sum_{k=2}^{n} V_{c2}(k)\left[i^k-j^k\right]\right|} \quad (28)$$

$$\lambda_3 = \frac{1}{T}\ln\frac{\left|I_L(1)(i-j)+\sum_{k=2}^{n} I_L(k)\left[(i+T)^k-(j+T)^k\right]\right|}{\left|I_L(1)(i-j)+\sum_{k=2}^{n} I_L(k)\left[i^k-j^k\right]\right|} \quad (29)$$

where $V_{c1}(k)$, $V_{c2}(k)$, and $I_L(k)$ are the *kth* coefficient in Taylor series $v_{c1}(t)$, $v_{c2}(t)$, and $i_{L(t)}$, respectively.

Results and Discussion

With the help of MATLAB software, we have considered the current controlled Colpitts oscillator described by (9) and the LE based on the Wolf method [1] with respect to the variation of C_1 and L in a short interval time $t \in [0, 3\text{Sec}]$ are numerically calculated and presented in Tables 5 and 6. Besides, according to the DTM technique, the LE based on DTM with respect to the variation of C_1 and L in a short interval time $t \in [0, 3\text{Sec}]$ are calculated analytically in Tables 7 and 8.

Table 5: Results of the numerical method for LEs calculations with respect to parameter C_1

Parameters Values		λ_1	λ_2	λ_3
Constant	Variable			
$R=35\,\Omega$, $L=0.055\,mH$, $h_{ie}=688$, $C_2=0.1\,nF$, $\alpha=0.088$, $\beta=0.008$	$C_1=0.1\,nF$	0.061432	0.000465	-0.033188
$R=35\,\Omega$, $L=0.055\,mH$, $h_{ie}=688$, $C_2=0.1\,nF$, $\alpha=0.088$, $\beta=0.008$	$C_1=0.2\,nF$	0.283190	0.100539	0.025467
$R=35\,\Omega$, $L=0.055\,mH$, $h_{ie}=688$, $C_2=0.1\,nF$, $\alpha=0.088$, $\beta=0.008$	$C_1=0.01\,nF$	-0.151487	-0.151991	-2.207523

Table 6: Results of the numerical method for LEs calculations with respect to parameter L

Parameters Values		λ_1	λ_2	λ_3
Constant	Variable			
$R=35\,\Omega$, $C_1=0.1\,nF$, $h_{ie}=688$, $C_2=0.1\,nF$, $\alpha=0.088$, $\beta=0.008$	$L=0.025\,mH$	0.001242	-0.2211698	-0.0656512
$R=35\,\Omega$, $C_1=0.1\,nF$, $h_{ie}=688$, $C_2=0.1\,nF$, $\alpha=0.088$, $\beta=0.008$	$L=0.1\,mH$	0.485387	-0.1248960	-0.515123
$R=35\,\Omega$, $C_1=0.1\,nF$, $h_{ie}=688$, $C_2=0.1\,nF$, $\alpha=0.088$, $\beta=0.008$	$L=0.092\,mH$	0.275904	0.106224	0.035907
$R=35\,\Omega$, $C_1=0.1\,nF$, $h_{ie}=688$, $C_2=0.1\,nF$, $\alpha=0.088$, $\beta=0.008$	$L=0.055\,mH$	0.061432	0.000465	-0.331888

Table 7: Results of the analytical method for LEs based on DTM calculations with respect to parameter C_1 for $t\in[0,\,3\mathrm{Sec}]$

Parameters Values		λ_1	λ_2	λ_3
Constant	Variable			
$R=35\,\Omega$, $L=0.055\,mH$, $h_{ie}=688$, $C_2=0.1\,nF$, $\alpha=0.088$, $\beta=0.008$	$C_1=0.1\,nF$	0.08235	0.0000123	-0.451888
$R=35\,\Omega$, $L=0.055\,mH$, $h_{ie}=688$, $C_2=0.1\,nF$, $\alpha=0.088$, $\beta=0.008$	$C_1=0.2\,nF$	0.384491	0.21546	0.036465
$R=35\,\Omega$, $L=0.055\,mH$, $h_{ie}=688$, $C_2=0.1\,nF$, $\alpha=0.088$, $\beta=0.008$	$C_1=0.01\,nF$	-0.251567	-0.231411	-3.152214

Table 8: Results of the analytical method for LEs based on DTM calculations with respect to parameter L for $t\in[0,\,3\mathrm{Sec}]$

Parameters Values		λ_1	λ_2	λ_3
Constant	Variable			
$R=35\,\Omega$, $C_1=0.1\,nF$, $h_{ie}=688$, $C_2=0.1\,nF$, $\alpha=0.088$, $\beta=0.008$	$L=0.025\,mH$	0.0001323	-0.2212745	-0.0725411
$R=35\,\Omega$, $C_1=0.1\,nF$, $h_{ie}=688$, $C_2=0.1\,nF$, $\alpha=0.088$, $\beta=0.008$	$L=0.1\,mH$	0.573286	-0.2136854	-0.485534
$R=35\,\Omega$, $C_1=0.1\,nF$, $h_{ie}=688$, $C_2=0.1\,nF$, $\alpha=0.088$, $\beta=0.008$	$L=0.092\,mH$	0.375401	0.125321	0.032832
$R=35\,\Omega$, $C_1=0.1\,nF$, $h_{ie}=688$, $C_2=0.1\,nF$, $\alpha=0.088$, $\beta=0.008$	$L=0.055\,mH$	0.08235	0.0000123	-0.451888

As shown in Tables 5 and 7, by considering $R=35\,\Omega$, $L=0.055mH$, $h_{ie}=688$, $C_2=0.1nF$, $\alpha=0.088$, $\beta=0.008$, and $C_1=0.01nF$, the proposed Colpitts oscillator described in (9) doesn't oscillate, and for the other parameters listed in Tables 5-8, the equilibrium point of the system is unstable and the system never converges to a fixed point.

In other words, the system can have strong attractor for these parameters. The accuracy of the numerical method based on the Wolf method in comparison with the analytical method based on DTM for the LEs calculation, with respect to the variation of different parameters, such as C_1 and L, are calculated in Tables 9 and 10.

Table 9: Differences between Numerical methods based on Wolf method and DTM for LEs calculations with respect to a variation of parameter C_1

Parameters Values		$\Delta_\lambda = \lvert\lambda_{Numerical} - \lambda_{DTM}\rvert$		
Constant	Variable	Δ_{λ_1}	Δ_{λ_2}	Δ_{λ_3}
$R = 35\,\Omega$, $L = 0.055\,mH$, $h_{ie} = 688$, $C_2 = 0.1\,nF$, $\alpha = 0.088$, $\beta = 0.008$	$C_1 = 0.1\,nF$	0.020918	0.0004527	0.120000
$R = 35\,\Omega$, $L = 0.055\,mH$, $h_{ie} = 688$, $C_2 = 0.1\,nF$, $\alpha = 0.088$, $\beta = 0.008$	$C_1 = 0.2\,nF$	-0.101301	0.114921	0.010998
$R = 35\,\Omega$, $L = 0.055\,mH$, $h_{ie} = 688$, $C_2 = 0.1\,nF$, $\alpha = 0.088$, $\beta = 0.008$	$C_1 = 0.01\,nF$	0.100080	0.079420	0.9446910

Table 10: Differences between Numerical methods based on Wolf method and DTM for LEs calculations with respect to a variation of parameter L

Parameters Values		$\Delta_\lambda = \lvert\lambda_{Numerical} - \lambda_{DTM}\rvert$		
Constant	Variable	Δ_{λ_1}	Δ_{λ_2}	Δ_{λ_3}
$R = 35\,\Omega$, $C_1 = 0.1\,nF$, $h_{ie} = 688$, $C_2 = 0.1\,nF$, $\alpha = 0.088$, $\beta = 0.008$	$L = 0.025\,mH$	0.0011097	0.0001047	0.0068899
$R = 35\,\Omega$, $C_1 = 0.1\,nF$, $h_{ie} = 688$, $C_2 = 0.1\,nF$, $\alpha = 0.088$, $\beta = 0.008$	$L = 0.1\,mH$	0.0908990	0.0887894	0.0295890
$R = 35\,\Omega$, $C_1 = 0.1\,nF$, $h_{ie} = 688$, $C_2 = 0.1\,nF$, $\alpha = 0.088$, $\beta = 0.008$	$L = 0.092\,mH$	0.0994970	0.0190970	0.0030750
$R = 35\,\Omega$, $C_1 = 0.1\,nF$, $h_{ie} = 688$, $C_2 = 0.1\,nF$, $\alpha = 0.088$, $\beta = 0.008$	$L = 0.055\,mH$	0.0209180	0.0004527	0.1200010

As shown in Tables 9 and 10, Δ_λ indicates the differences between Numerical methods based on Wolf method and DTM for each of LEs in the proposed oscillator. In addition, the numbers mentioned in Tables 9 and 10 show the accuracy of the DTM analytical method in calculating LEs relative to the numerical method. In the other words, these tables are presented to show the accuracy of the analytical methods in comparison with the numerical analysis results for LEs calculations. By comparing the numerical simulations and the analytic results for LEs calculations, we have excellent agreement between the LEs variations for the Colpitts oscillator in a short interval time studied here.

Conclusion

This paper applied a novel analytical method for nonlinear analysis of the mathematical model of bias current-controlled Colpitts oscillator using its parameters, then proposed an analytical estimate of the LE based on the DTM technique. Simulation results have been provided to verify the effectiveness of unknown parameters on LEs with different initial conditions. To validate the applied method in the analytical solution of the Colpitts oscillator dynamic model, the RK4 method is used. The results show good accuracy of DTM in short time intervals $t \in [0, 3\text{Sec}]$. In this paper, comparing an analytical method and a numerical method for calculating LEs in the Colpitts oscillator with respect to various parameters is presented.

Finally, according to the numerical and analytical results, different parameters on LEs values are investigated.

Appendix

The Colpitts oscillator consists of a gain device and the tank circuit including a combination of inductors and capacitors. The output of Colpitts oscillator is connected with an LC circuit feedback loop. A gain device is needed to compensate for the lost energy in the tank circuit and to maintain oscillation inside the tank circuit. One of the advantages of the Colpitts oscillator over other oscillators is that the Colpitts oscillator can be used to produce low-harmonic sine waveforms due to the low impedance paths of the capacitors at high frequencies. Also because of these capacitive reaction characteristics, the MOSFET-based Colpitts oscillator can operate at very high frequencies. Of course, any MOSFET used as an amplifier must be able to operate at the required high frequencies. Due to analyze the nonlinearities associated with a MOSFET based circuit. Figure 8 (a) illustrates the Colpitts oscillator based on MOSFET. The control parameter of this oscillator is the current source connected to the circuit between the source (S) of the MOSFET and the ground. Due to analyze the nonlinearities associated with a MOSFET based circuit; the small-signal equivalent circuit model of a MOSFET is used. In order for the diode at the gate-drain junction with its anode at the gate to be in reverse bias, the drain voltage must be higher than that of the gate voltage. The

nonlinearity in the model of this transistor is due to the effect of the diodes in the p-n gate-source junction, which is determined by the current from the drain to the source i_d . This current can be calculated as:

$$i_d = \begin{cases} 0 & v_{gs} \le V_{th} \ (Cotoff\ region) \\ g_{m_0}\left(v_{gs} - V_{th}\right) & v_{gs} \le V_{th} \ (\text{Saturation } region) \\ g_{m_0}\left(v_{gs} - V_{th}\right)\left(v_{gs} + v_{gd} - 2V_{th}\right) & v_{gs} \le V_{th} \ (\text{Triode region}) \end{cases} \quad (30)$$

where $V_{th} < 0$ the cutoff is value of the voltage between the gate and the source; g_{m0} is the current gain of the MOSFET.

The equivalent circuit is illustrated in Fig. 8 (b).

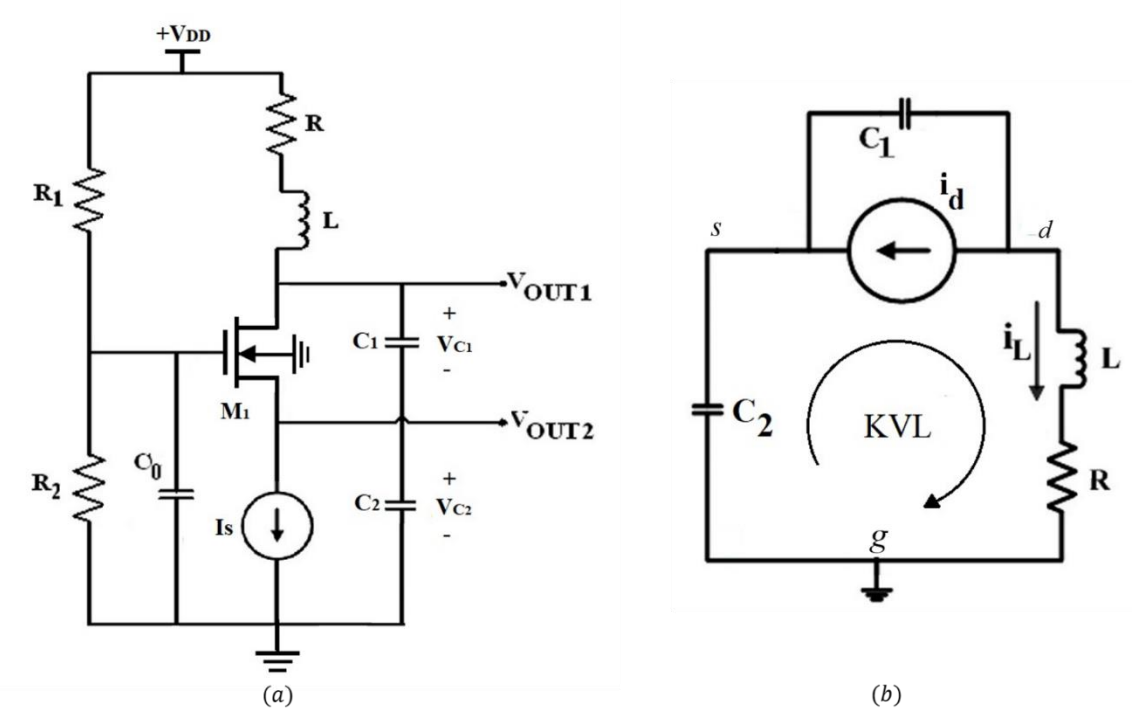

Fig. 8: (a) The schematic of MOSFET based Colpitts oscillator. (b) Small-signal equivalent circuit of the Colpitts oscillator.

The dynamic state equations are calculated as:

$$\begin{cases} KCL\ d \ \rightarrow \ C_1 \dfrac{dv_{c_1}(t)}{dt} + i_L(t) + i_{d(t)} = 0 \\ KCL\ s \ \rightarrow \ C_2 \dfrac{dv_{c_2}(t)}{dt} + i_L(t) = 0 \\ KVL \ \rightarrow \ L\dfrac{di_L(t)}{dt} + Ri_L(t) - v_{c_1}(t) - v_{c_2}(t) = 0 \end{cases} \quad (31)$$

where $v_{c_1}(t)$ and $v_{c_2}(t)$ are the voltages across C_1 and C_2 , respectively, and $i_L(t)$ is the current through inductor L . Here, $i_d(t)$ is calculated from (30).

So,

$$\begin{cases} \dfrac{dv_{c1}(t)}{dt} = -\dfrac{1}{C_1}\left(i_{L(t)} + i_d\right) \\ \dfrac{dv_{c2}(t)}{dt} = -\dfrac{1}{C_2} i_{L(t)} \\ \dfrac{di_{L(t)}}{dt} = \dfrac{1}{L}\left(\left(v_{c1}(t) + v_{c2}(t)\right) - R\, i_{L(t)}\right) \end{cases} \quad (32)$$

In order to nonlinear analysis of (32) differential transform method can be used. The high frequency operation of the Colpitts oscillators is a challenging issue due to the parasitic capacitance of the junctions of a MOSFET. Due to nonlinear analysis of high frequency chaotic oscillator, high-frequency small-signal equivalent circuit model of MOSFET can be used.

In order to nonlinear analysis of the MOSFET-based Colpitts oscillator similar to BJT, based Colpitts oscillator the DTM technique can be used.

Author Contributions

F. Setoudeh and A. Ghomi Taheri designed the experiments. A. Ghomi Taheri and F. Setoudeh collected the data. A. Ghomi Taheri, F. Setoudeh, M.B. Tavakoli interpreted the results and wrote the manuscript.

Acknowledgment

This work is completely self-supporting, thereby no any financial agency's role is available.

Conflict of Interest

The authors declare no potential conflict of interest regarding the publication of this work. In addition, the ethical issues including plagiarism, informed consent, misconduct, data fabrication and, or falsification, double publication and, or submission, and redundancy have been completely witnessed by the authors.

Abbreviations

DTM	Differential transform method
RK4M	Fourth order Runge-Kutta method
LE	Lyapunov exponent
LLE	Largest Lyapunov exponent
MsDTM	Multi-stage differential transform metod
ADM	Adomian decomposition method
ETM	Elzaki transform method
BJT	Bipolar Junction Transistor
MOSFET	Metal oxide semiconductor field effect transistor
$x(t), y(t), z(t)$	State variable
$X(k), Y(k), Z(k)$	Differential transform of State variable
k	Order DTM
h_{ie}, g_m	Small-signal parameter BJT transistor
V_{C1}	Voltages across C_1
V_{C2}	Voltages across C_2
i_L	Current through inductor L
g_{m1}, g_{m3}	Small-signal transconductance
$\alpha,\ \beta$	Constant parameter
k_1, k_2, k_3	Four places within each step
T	Number of iterations or evolution times
$x(N)$	Time series value
λ	Symbol of Lyapunov exponent
Δ_λ	Differences between Numerical methods based on Wolf method and DTM

References

[1] M.J. Feigenbaum, “Universal behavior in nonlinear systems,” Physica D, 7(1-3): 16-39, 1983.

[2] H. Lin, S. Yim, “Analysis of a nonlinear system exhibiting chaotic, noisy chaotic, and random behaviors,” J. Appl. Mech. Jun, 63(2): 509-516, 1996.

[3] M.S. Soliman, “Global stability properties of equilibria, periodic, and chaotic solutions,” Appl. Math. Modell., 20(7): 488-500, 1996.

[4] B. Radziszewski, A. Sławiński, “Estimation of stability in non-linear systems,” Mach. Dyn. Probl., 24(3): 113-125, 2000.

[5] E.A. Best, "Stability assessment of nonlinear systems using the lyapunov exponent," Ohio University, 2003.

[6] M. Balcerzak, D. Pikunov, A. Dabrowski, "The fastest, simplified method of Lyapunov exponents spectrum estimation for continuous-time dynamical systems," Nonlinear Dyn., 94(4): 3053-3065, 2018.

[7] T. Zeren, M. ÖZBEK, N. Kutlu, M. Akilli, "Significance of using a nonlinear analysis technique, the Lyapunov exponent, on the understanding of the dynamics of the cardiorespiratory system in rats," Turk. J. Med. Sci., 46(1): 159-165, 2016.

[8] H. Kantz, T. Schreiber, Nonlinear Time Series Analysis, Cambridge university press, 2004.

[9] J.B. Dingwell, L.C. Marin, “Kinematic variability and local dynamic stability of upper body motions when walking at different speeds,” J. Biomech., 39(3): 444-452, 2006.

[10] J.B. Dingwell, Lyapunov Exponents, Wiley encyclopedia of biomedical engineering, 2006.

[11] C. Yang, Q. Wu, “On stability analysis via Lyapunov exponents calculated from a time series using nonlinear mapping—a case study,” Nonlinear Dyn., 59(1-2): 239, 2010.

[12] M.A. Fuentes, Y. Sato, C. Tsallis, "Sensitivity to initial conditions, entropy production, and escape rate at the onset of chaos," Phys. Lett. A, 375(33): 2988-2991, 2011.

[13] E. Glasner, B. Weiss, "Sensitive dependence on initial conditions,” Nonlinearity, 6(6): 1067-1075, 1993.

[14] I. Khovanov, N. Khovanova, V. Anishchenko, P. McClintock, "Sensitivity to initial conditions and lyapunov exponent of a quasiperiodic system," Tech. Phys., 45(5): 633-635, 2000.

[15] C. Abraham, G. Biau, B. Cadre, "On Lyapunov exponent and sensitivity," J. Math. Anal. Appl., 290(2): 395-404, 2004.

[16] G.-C. Wu, D. Baleanu, “Jacobian matrix algorithm for Lyapunov exponents of the discrete fractional maps,” Commun. Nonlinear Sci. Numer. Simul., 22(1-3): 95-100, 2015.

[17] A. Wolf, J.B. Swift, H.L. Swinney, J.A. Vastano, “Determining Lyapunov exponents from a time series,” Physica D, 16(3): 285-317, 1985.

[18] H.D. Abarbanel, R. Brown, M.B. Kennel, "Local Lyapunov exponents computed from observed data," J. Nonlinear Sci., 2(3): 343-365, 1992.

[19] R. Gencay, W.D. Dechert, "An algorithm for the N-Lyapunov exponents of an N-dimensional unknown dynamical system," Physica D, 59(1-3): 142-157, 1992.

[20] X. Zeng, R. Eykholt, R. Pielke, "Estimating the Lyapunov-exponent spectrum from short time series of low precision," Phys. Rev. Lett., 66(25): 3229, 1991.

[21] M.B. Tayel, E.I. AlSaba, "Robust and sensitive method of lyapunov exponent for heart rate variability," arXiv preprint arXiv:1508.00996, 2015.

[22] L. G. de la Fraga, E. Tlelo-Cuautle, "Optimizing the maximum Lyapunov exponent and phase space portraits in multi-scroll chaotic oscillators," Nonlinear Dyn. 76(2): 1503-1515, 2014.

[23] Y. Liu, X.C. Zhang, "A new method based on Lyapunov exponent to determine the threshold of chaotic systems," Appl. Mech. Mater., 511-512, 2014.

[24] H. Liao, "Novel gradient calculation method for the largest Lyapunov exponent of chaotic systems," Nonlinear Dyn. 85(3): 1377-1392, 2016.

[25] F. Ayaz, "Solutions of the system of differential equations by differential transform method," Appl. Math. Comput., 147(2): 547-567, 2004.

[26] K. Al Ahmad, Z. Zainuddin, F.A. Abdullah, "Solving non-autonomous nonlinear systems of ordinary differential equations using multi-stage differential transform method," Aust. J. Math. Anal. Appl., 17(2): 1-18, 2020.

[27] Y. Do, B. Jang, "Enhanced multistage differential transform method: application to the population models," Abstr. Appl. Anal., 2012: 1-14, 2012.

[28] E.A. Az-Zo’bi, K. Al-Khaled, A. Darweesh, "Numeric-Analytic solutions for nonlinear oscillators via the modified multi-stage decomposition method," Mathematics, 7(6): 550, 2019.

[29] T.M. Elzaki, "Solution of nonlinear differential equations using mixture of Elzaki transform and differential transform method," in International Mathematical Forum, 7(13): 631-638, 2012.

[30] T.M. Elzaki, E.M. Hilal, J.-S. Arabia, J.-S. Arabia, "Homotopy perturbation and Elzaki transform for solving nonlinear partial differential equations," Math. Theor. Model., 2(3): 33-42, 2012.

[31] A.-M. Wazwaz, "A reliable modification of Adomian decomposition method," Appl. Math. Comput., 102(1): 77-86, 1999.

[32] S. Abbasbandy, "Improving Newton–Raphson method for nonlinear equations by modified Adomian decomposition method," Appl. Math. Comput., 145(2-3): 887-893, 2003.

[33] A. Arikoglu, I. Ozkol, "Solution of boundary value problems for integro-differential equations by using differential transform method," Appl. Math. Comput., 168(2): 1145-1158, 2005.

[34] C. Huang, J. Li, F. Lin, "A new algorithm based on differential transform method for solving partial differential equation system with initial and boundary conditions," Adv. Pure. Math., 10(5): 337, 2020.

[35] S. Al-Ahmad, I. M. Sulaiman, M. Mamat, K. Kamfa, "Solutions of classes of differential equations using modified differential transform method," J. Math. Comput. Sci., 10(6): 2360-2382, 2020.

[36] H. Abbasi, A. Javed, "Implementation of Differential Transform Method (DTM) for large deformation analysis of cantilever beam," in Proc. IOP Conference Series: Materials Science and Engineering, 899(1): 012003, 2020.

[37] L.-j. Xie, C.-l. Zhou, S. Xu, "Solving the systems of equations of Lane-Emden type by differential transform method coupled with adomian polynomials," Mathematics, 7(4): 377, 2019.

[38] S. Mukherjee, B. Roy, S. Dutta, "Solution of the Duffing–van der Pol oscillator equation by a differential transform method," Phys. Scripta, 83(1): 015006, 2010.

[39] I. Khatami, E. Zahedi, M. Zahedi, "Efficient solution of nonlinear Duffing oscillator," J. Comput. Appl. Mech., 6(2): 219-234, 2020.

[40] A.J. Christopher, N. Magesh, G.T. Preethi, Dynamical Analysis of Corona-virus (COVID– 19) Epidemic Model by Differential Transform Method, 2020.

[41] R.M. Kouayep, A.F. Talla, J.H. T. Mbé, P. Woafo, "Bursting oscillations in Colpitts oscillator and application in optoelectronics for the generation of complex optical signals," Opt. Quantum Electron, 2(291), 2020.

[42] S. Sarkar, S. Sarkar, B.C. Sarkar, "On the dynamics of a periodic Colpitts oscillator forced by periodic and chaotic signals," Commun. Nonlinear Sci. Numer. Simul., 19(8): 2883-2896, 2014.

[43] Z. Wei, W. Zhang, "Hidden hyperchaotic attractors in a modified Lorenz–Stenflo system with only one stable equilibrium," Int. J. Bifurcation Chaos, 24(10): 1450127, 2014.

[44] M. Valsakumar, S. Satyanarayana, V. Sridhar, "Signature of chaos in power spectrum," Pramana, 48(1): 69-85, 1997.

Biographies



Alireza Ghomi Taheri is currently PhD student in electrical engineering at the Islamic Azad University, branch of Arak. His research interest includes signal processing and nonlinear system.



Farbod Setoudeh received his PhD degree in electrical engineering from Science and research branch of Islamic Azad University and is currently an assistant professor at electrical engineering department of Arak University of Technology. His research interests include intelligent system, signal processing, and nonlinear system.



Mohammad Bagher Tavakoli received his PhD degree in electrical engineering from Science and Research branch of Azad University in 2012 and is currently an assistant professor at electrical engineering department of Azad University. His research interests include linear integrated circuits.

Copyrights
©2021 The author(s). This is an open access article distributed under the terms of the Creative Commons Attribution (CC BY 4.0), which permits unrestricted use, distribution, and reproduction in any medium, as long as the original authors and source are cited. No permission is required from the authors or the publishers.



How to cite this paper:
A. Ghomi Taheri F. Setoudeh, M.B. Tavakoli, "Nonlinear analysis of colpitts oscillator using differential transform method," J. Electr. Comput. Eng. Innovations, 9(2): 127-142, 2021.

DOI: 10.22061/JECEI.2020.7543.402

URL: http://jecei.sru.ac.ir/article_1496.html

