SRTTU

Journal of Electrical and Computer Engineering Innovations

JECEI, Vol. 5, No. 1, 2017

Regular Paper

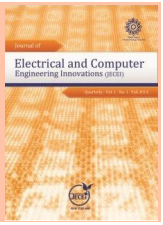

A Small Printed Quadrifilar Helical Antenna for BGAN/GPS Applications

Robab Kazemi [1,*]

[1]Faculty of Electrical and Computer Engineering, University of Tabriz, Tabriz, Iran.

[*]Corresponding Author's Information: r.kazemi@tabrizu.ac.ir

ARTICLE INFO

ARTICLE HISTORY:
Received 13 June 2017
Accepted 22 June 2017

KEYWORDS:
BGAN
GPS
Printed quadrifilar helical antenna
Lumped-element integrated feed network
Right-hand circular
Polarization

ABSTRACT

This paper presents an element of a 2×2-element array antenna for Inmarsat BGAN/GPS applications. The element is an axial mode printed quadrifilar helical antenna that has been integrated with a compact feed network to provide sequential phase rotation for circular polarization (CP) radiation. The novel integrated lumped-element feed network is designed to provide a balanced RF power to the four helix arms with a 90° sequential phase difference between them. The design maintains a low cross polarization, and accordingly, a high quality of RHCP up to ±66° over the transmit frequency band of 1616 MHz to 1626 MHz. The gain in this frequency range is higher than 3.5 dB with a return loss better than 11 dB and a perfect circular polarization performance (axial ratio ~0 dB). The proposed antenna has small size, light weight, low cost, almost hemispherical radiation pattern and excellent circular polarization that can become a good candidate in satellite L1-band and BGAN satellite communications.

1. Introduction

Recently, mobile satellite communication systems have been widely used such as Inmarsat Broadband Global Area Network (BGAN) [1] or Global Positioning System (GPS) [2]. For these applications, circular polarization antennas are well suited for channel transmission due to their insensitivity to polarization mismatch and multipath fading.

More recently obtaining a high quality circular polarization (CP) performance over a wide range of electronic beam steering angles is challenging, as axial ratio rapidly degrades as the beam steering angle moves away from the boresight direction [3], [4].

If the array is also required to operate over a large bandwidth, the polarization problem is further compounded. Significant number of planar CP element designs only offer high quality CP over a very small bandwidth [5], [6].

Patch antennas which are often used for GPS applications, offer acceptable axial ratio only at the center of the bandwidth, but degrade rapidly outside the center frequency. This type of antenna can be used in L-band array for fixed beam configuration, but the L-band Inmarsat BGAN transmitter system operates over a frequency range of 1616 MHz to 1626 MHz with a high quality of CP and capability of electronic beam steering.

A good candidate for BGAN application is printed quadrifilar helical antenna (PQHA) [7], [8]. It can produce a hemispherical radiation pattern with excellent circular polarization, has light weight and low cost. The PQHA is composed of four equi-spaced parallel radiators printed on a thin dielectric substrate wrapped around a cylindrical core and the four helix arms are fed with a 90° sequential phase difference between them.

The radiation patterns are typically controlled by properly selecting the pitch angle of the radiators, the length of the radiators, and the diameter of the core. These radiators require quite complex feed networks, fairly large package size, and they are difficult to mass produce.

In this paper, we are presenting the results of a miniaturized printed quadrifilar helical antenna for BGAN/GPS applications. In section 2, the design procedure of the PQHA is presented. The novel lumped-element integrated compact feed network design is discussed in section 3, and the conclusion is given in section 4.

2. PQH Antenna Design

The geometry of the printed quadrifilar helical antenna is shown in Fig. 1. Generally, QHAs are resonant antennas and the length of each constitutive helical antenna is approximately an integer multiple of a quarter wavelength, and they can have either open end or short termination. A λ/4 or 3λ/4 configuration is generally used for an open-ended QHA, while λ/2 or λ configuration is often used for short-circuit QHA [8], [9].

The winding sense and phase sequence of these helices are designed for RHCP, where the helix wound in the left-hand sense and the feeds are in a counter-clockwise phase progression to produce the forward helix mode [9].

Each helix element is composed of a conventional helix arm connected to the feed point with a width of W_a = 3mm, and has open-end termination. The antenna is printed on a 60μm flexible PyraluxAC substrate with ε_r = 3.7 and tan δ = 0.0014. The thin substrate is wrapped into a cylindrical shape without a support, and mounted on a small circular ground plane. The whole structure was optimized using *CST Microwave Studio* software to ensure proper operation.

Fig. 2 shows the simulated return loss of the proposed antenna mounted on a circular ground plane of 1.5 times greater than the cylinder's diameter, fed with an ideal amplitude and phase excitation. It can be seen that a return loss of better than 11 dB is achieved over the frequency range of 1615 MHz to 1650 MHz.

The antenna is designed to operate over the Inmarsat BGAN transmitter frequencies. The co-pol and cross-pol radiation patterns at φ-plane as a function of frequency are shown in Fig. 3. In this band, the radiation patterns are relatively frequency independent.

The high performance in terms of the radiation patterns and the gain are obtained from 1560 MHz to 1660 MHz. It is noted that a half-power beamwidth of about 132° can be achieved.

In Fig. 4(a), the realized gain and the axial ratio vs. frequency at the broadside direction is presented. It can be seen that the positive gain and a perfect axial ratio (~0 dB) is obtained over the frequency range of interest. The maximum gain is 3.73 dB at 1619 MHz.

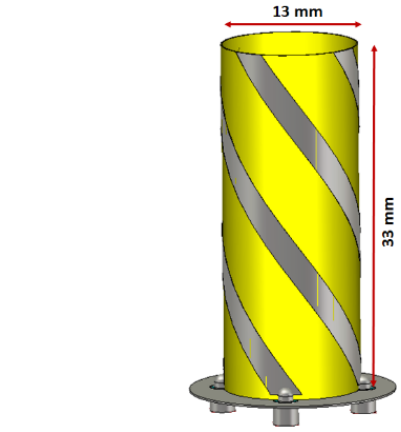

(a)

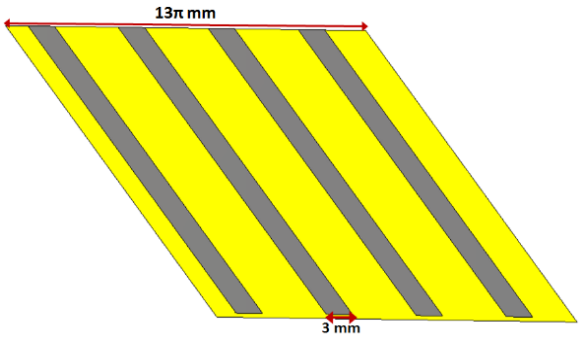

(b)

Figure 1: (a) Configuration of the PQHA antenna; (b) the unwrapped PQHA.

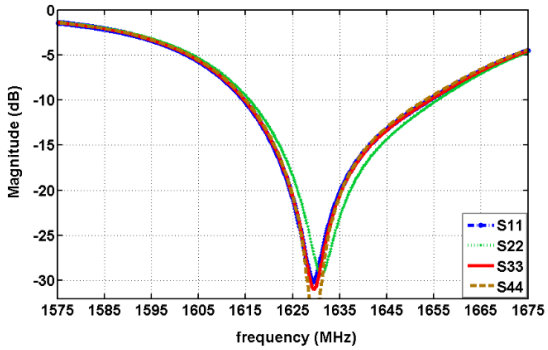

Figure 2: Return loss of the PQHA fed with ideal amplitude and phase.

The axial ratio over the hemisphere at some frequencies in the bandwidth is also shown in Fig. 4(b). The structure of the proposed antenna makes axial ratio to improve less than 2 dB in the range of HPWB (±66°). These show a polarization isolation of 24dB at boresight and an axial ratio of ~0 dB at the frequency range of 1616 MHz to 1626 MHz.

Here, we carried out a study to investigate the impact of using a finite ground plane on the antenna performance. The diameter of the circular ground plane (D) was varied from 19 mm to 28 mm. As seen in Fig. 5(a)-(d), the ground plane size has insignificant effect on the antenna performance, showing slight

increase in the resonance frequency with increasing the diameter of the ground plane (GND).

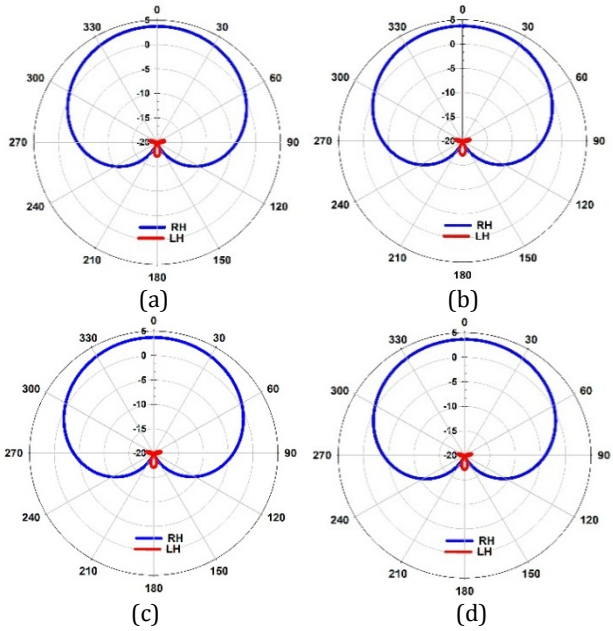

Figure 3: Right-hand and Left-hand radiation patterns over the operational bandwidth (a) 1618 MHz, (b) 1620 MHz (c) 1624 MHz, (d) 1626 MHz.

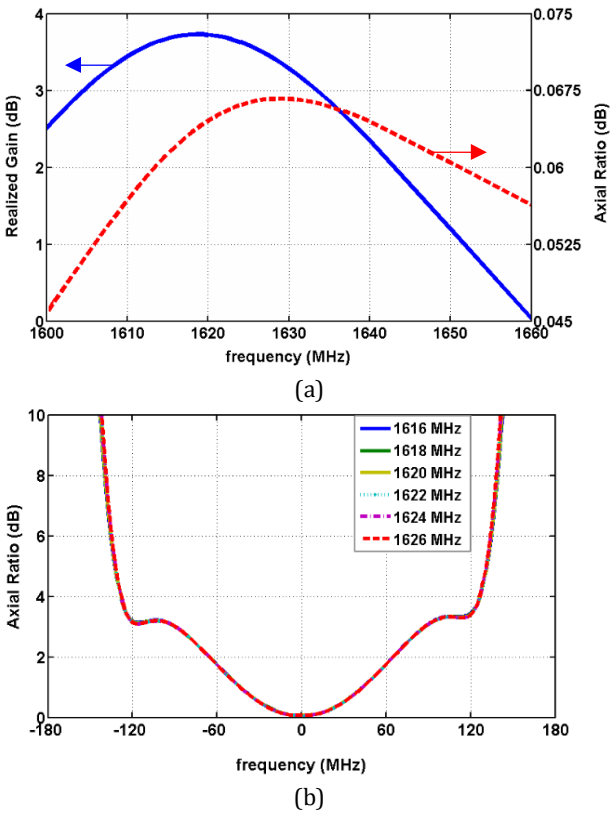

Figure 4: (a) maximum realized gain and axial ratio at the broadside direction, (b) axial ratio radiation patterns over the bandwidth.

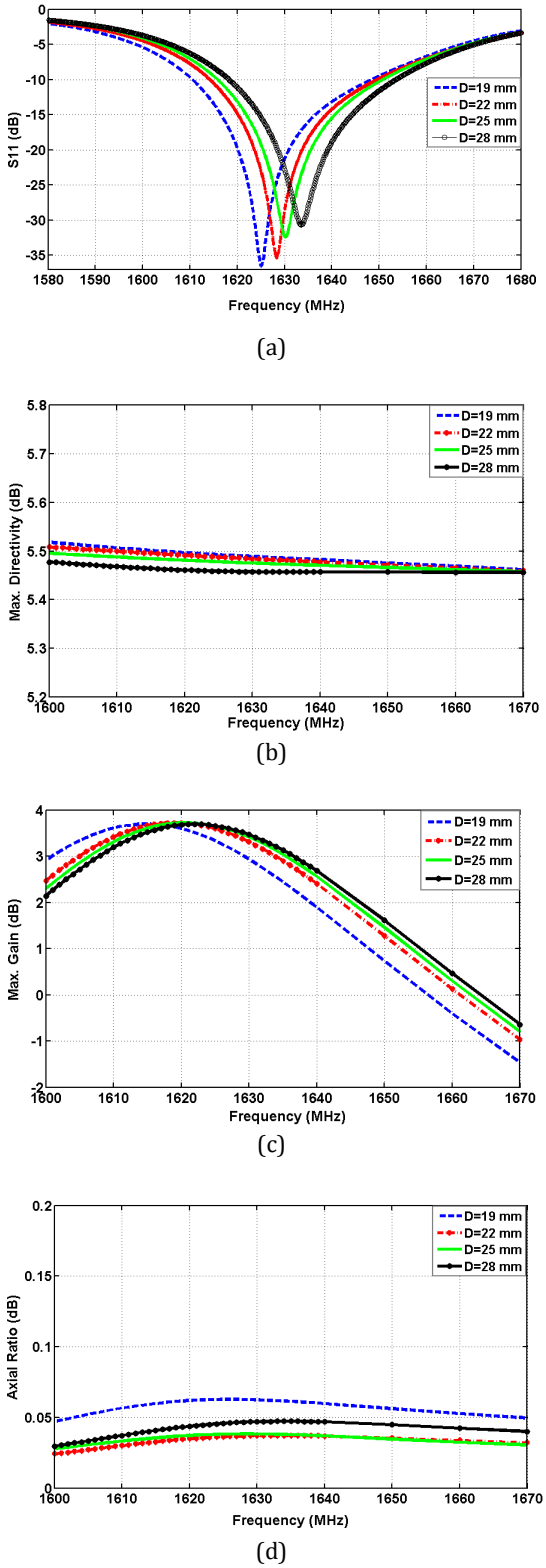

Figure 5: Effect of the finite ground plane on the PQHA performance. (a) GND plane size effect on the antenna's return loss, (b) GND plane size effect on the antenna's max. directivity, (c) GND plane size effect on the broadside gain, (d) GND plane size effect on the broadside axial ratio.

3. Compact Lumped-Element Feed Network

After optimizing the helix parameters to achieve

the desired beam coverage, the input impedance of each helix must be characterized so that an appropriate feeding network can be implemented. The input impedance of each helix is 4Ω, so the feed network not only should work as an impedance transformer to match the connector 50Ω impedance to the 4Ω impedance of the helices, but also provide the progressive 90° sequential phase rotation and equal amplitude to enhance the antenna CP performance compared to other feed structures. Here, we used quadrature Wilkinson power divider as in [8] to design a 4-way feed network. The feed network consists of a coaxial line at the input that is used as a balun feeding two parallel strips out-of-phase. The two parallel strips are connected to two microstrip Wilkinson power dividers as seen in the dual layer structure in Fig. 6(a). A ground plane is inserted between the two layers to convert the input 50Ω parallel-strip line into two identical microstrip lines with 25Ω characteristic impedance placed back-to-back [10]. The two identical microstrip lines are equal in magnitude and opposite in phase. The 90° phase delay between the two outputs of each Wilkinson power divider is realized by adding an extra microstrip line of λ/4 length. Using the above configuration, we get 0°, 90° from one Wilkinson splitter and 180°, and 270° from the second, thus we obtain a proper phase sequential rotation.

The lumped-element model of the proposed two-layer feed network is presented in Fig. 6(a). Each layer of the proposed divider consists of (1) a λ/4 line to transform input 25Ω to output 4Ω, (2) a Wilkinson power divider connected to two output ports, and (3) a 90° phase shifter at one of the output ports. The lumped-element circuit model of each layer of the feed network without connection pads is shown in Fig. 6(b). It is designed at the center frequency of 1621 MHz, and provides an equal distribution of RF power to the four helix arms in quadrature phase rotation with 0° (port #1), 90° (port #2), 180° (port #3) and 270° (port #4) phase differentials.

The feed network is printed on two 0.8 mm (31 mil) FR4 substrates with ε_r = 4.5 and tan δ = 0.02. Fig. 7 presents the input reflection coefficient, and magnitude and phase difference at the outputs of each layer. The power divider demonstrated less than ±0.2 dB and ±0.6° amplitude and phase imbalance at the output ports, respectively. It is indicated that the performance of the feed network is consistent with our design goals. The size of the feed network is 13.5 *mm*×11.2 *mm*.

A fabricated antenna integrated with the feed network is shown in Fig. 8. The overall size of the antenna with its integrated feed network is 13.5 *mm*×13*mm*×34 *mm*.

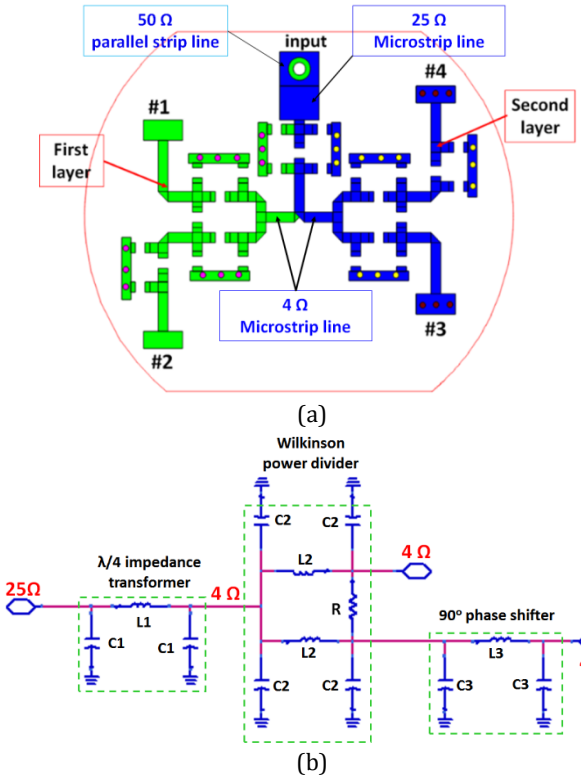

Figure 6: (a) The compact two-layer feed network, (b) Configuration of each layer (L1 = 1.4 nH, L2 = 0.2 nH, L3 = 3.4 nH, C1 = 2.5 pF, C2 = 33 pF, C3 = 13 pF, R = 8 Ω).

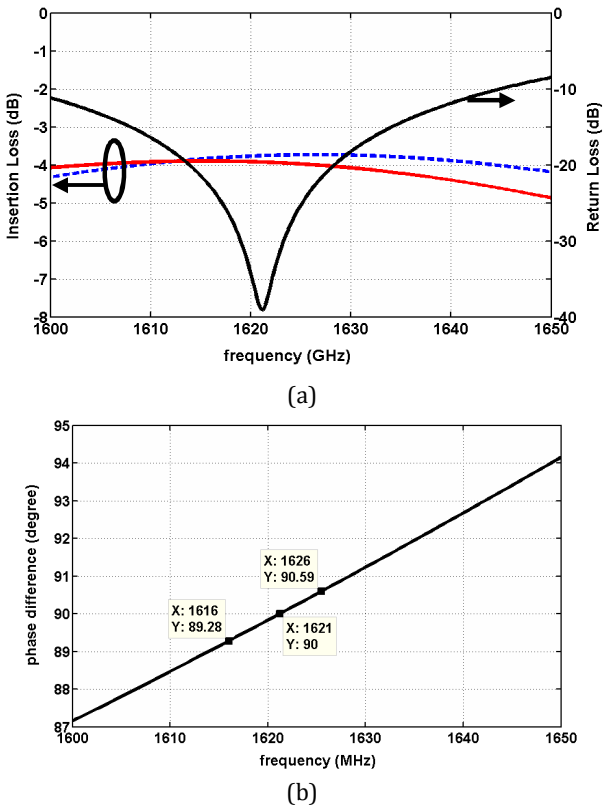

Figure 7: Simulated results of the feed network, (a) input return loss and output insertion losses, (b) phase difference between the output ports.



Figure 8: Fabricated antenna integrated with the feed network.

4. Conclusion

A printed quadrifilar helical antenna with its novel compact integrated feed network was presented. The lumped-element dual-layer feed network was designed to provide an equal amplitude of RF power to the four helix arms and 90° sequential phase difference between them. The design maintains a high quality of circular polarization up to ±66°, over the frequency coverage of 1616 MHz to 1626 MHz. In this frequency range, the gain is more than 3.5 dB with a return loss better than 11 dB and a perfect CP performance.

The proposed antenna has large bandwidth, almost hemispherical radiation pattern and excellent circular polarization that can become a candidate in satellite L1-band and BGAN communications.

References

[1] D.C. Morse and K. Griep, "Next generation FANS over Inmarsat Broadband Global Area Network (BGAN)," in *Proc. 23rd DASC Conf.*, pp.11.B.4-1-13, 2004.

[2] M. Shaw, D.A. Turner, and K. Sandhoo, "Modernization of the global positioning system," in Proc. *Japanese Inst. of Navigation, GPS Symp.*, pp. 3–12, 2002.

[3] S. O'Kane and V. Fusco, "Circularly polarized curl antenna lens with tilt properties," IEEE Trans. Ant. and Propag., vol. 57, no. 12, pp. 3043-3050, 2009.

[4] M. Amin, S. Ahmed, V. Fusco, H. Cantu, and T. Ratnarajah, "The effect of spatial axial ratio variation on QPSK modulation encoded using orthogonal circularly polarized signals," in *Proc. European Conf. on Wireless Technologies*, pp. 62–65, 2007.

[5] W. Richards and Y. Lo, "Design and theory of circularly polarized microstrip antennas," in *Proc. Int. Symp. on Ant. and Propag. Soc.*, vo. 17, pp. 117 – 120, 1979.

[6] K.L. Chung and A.S. Mohan, "A systematic design method to obtain broadband characteristics for singly-fed electromagnetically coupled patch antennas for circular polarisation," *IEEE Trans. Ant. and Propag.*, vol. 51, pp. 3239–3248, 2003.

[7] P. Xu, Z. Yan, X. Yang, T. Zhang, and G. Yuan,"Miniature folded printed quadrifilar helical antenna with integrated compact feeding network," *PIER lett.*, vol. 45, pp. 13-18, 2014.

[8] A. Takacs, H. Aubert, D. Belot, and H. Diez, "Miniaturization of compact quadrifilar helix antennas for telemetry, tracking and command applications," *PIERC*, vol. 60, pp. 125-136, 2016.

[9] B. Slade, "The basics of quadrifilar helix antennas," Orban Microwave Inc., 2015.

[10] S.G. Kim and K. Chang, "Ultrawide-band transitions and new microwave components using double-sided parallel-strip lines," *IEEE Trans. Microw. Theory Tech.*, vol. 52, no. 9, pp. 2148-2151, 2004.

Biographies



Robab Kazemi (S'09–M'12) received the B.Sc. degree in Electronic Engineering from Amir Kabir University of Technology, Tehran Polytechnic, Tehran, Iran, in 2004, and the M.Sc. and Ph.D. degrees in Communications Engineering from K. N. Toosi University of Technology, Tehran, Iran, in 2007 and 2012, respectively. In Aug. 2010 - Dec. 2011, June 2013 - Sept. 2013, and Jan. 2016 - Sept. 2016 she was a visiting research scholar at the Department of Electrical Engineering and Computer Science, The University of Tennessee, Knoxville, TN, USA. Currently, she is a faculty member at the University of Tabriz, Iran. Her research interests are design of passive microwave circuits, UWB antennas, antennas for medical applications, and electromagnetics.

How to cite this paper:

R. Kazemi "A small printed quadrifilar helical antenna for bgan/gps applications," *Journal of Electrical and Computer Engineering Innovations*, vol. 5, no. 1, pp. 7-11, 2017.

DOI: 10.22061/JECEI.2017.623

URL: http://jecei.srttu.edu/article_623.html